SHEET A4

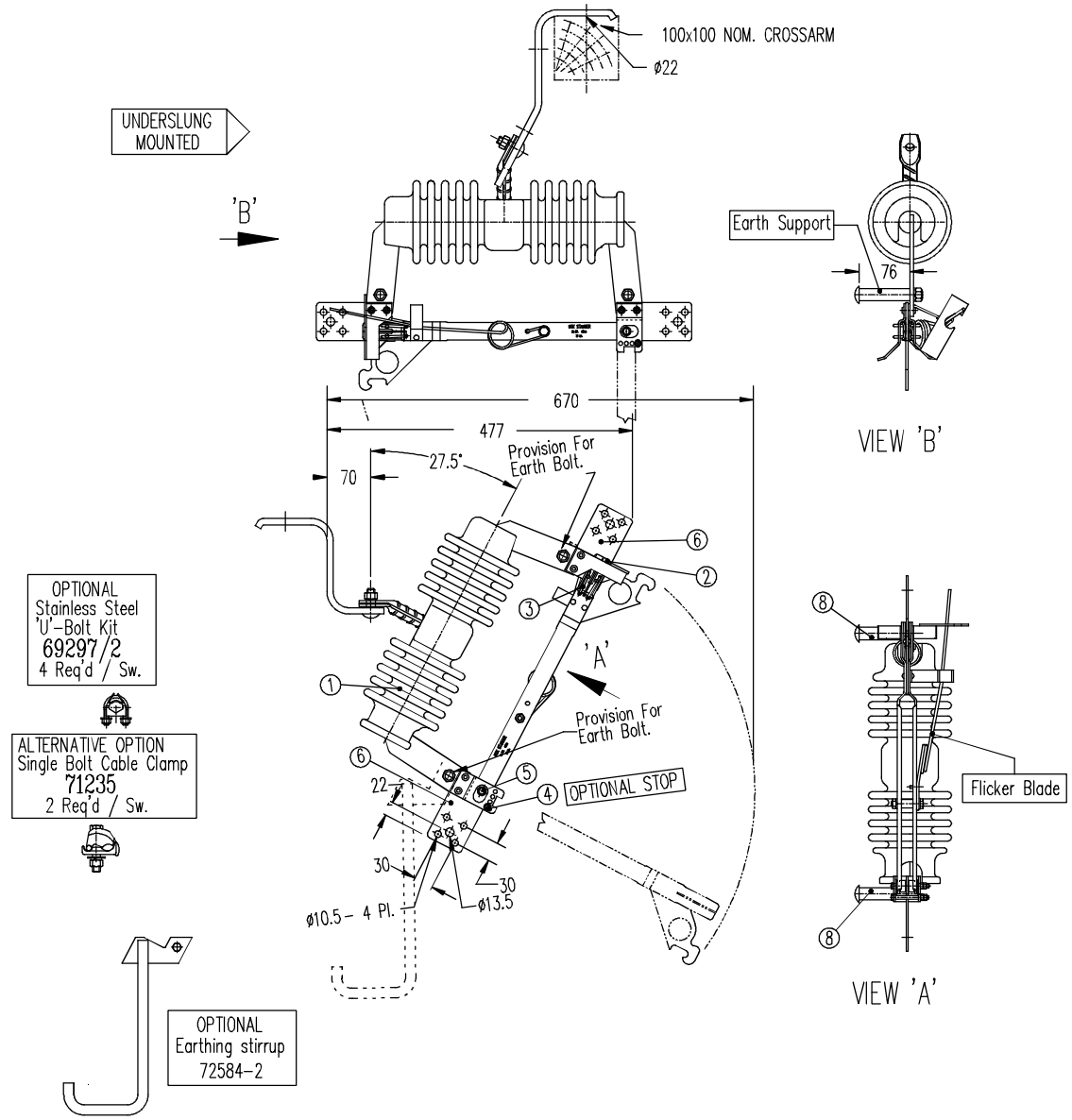

Notes:-

1). Insulator. : Inherently puncture proof & birdproof. Colour : Light Grey.
2). Silver to silver front contacts.
3). Front contact pressure assured via stainless steel 'Lyre' springs.
4). 90° or 60° Removable Stop.
5). Hinge Joint.: Silver washers with constant pressure 'Belleville' washers.
6). Multi-purpose terminal palm, for compression lugs or cable clamps. Refer Price List for cable clamp kits available.
7). All parts (3mm or less) manufactured from non-ferrous or stainless material, for max. corrosion protection.
8). Earth Support : Copper Alloy Tube with M10 x 100 Galv. Steel Bolt.
9). Crossarm Mounting Bracket, Cable Clamps & Earth Supports supplied loose, to be fitted at installation.

Technical Data — Applicable Standard.: AS1306 / 2650

A)Ratings		kV.	kV.
Rated Voltage. (max.)	U =	12	24
Nominal Voltage	V_n =	11	22
Insulation Level	B.I.L	150 kV.	
Max.Rated Normal Current.	I_n =	630 A	
Rated Frequency.		50 Hz.	
Rated Breaking Capacity (Mainly Active Load) A	I_{br} =	15	11
Rated Short - Time Current 1s	I_{sc} =	20 kA.	
Pollution Performance No.			
E.S.A.A. Med.Rainfall.	P =	76.5	9.6
High		66.9	8.4
Low		83.8	10.5
Specific Creepage. L_s/V_n	mm/kV.	43.2	21.6

B) Clearance Distances :		
Creepage.	L_s =	475 mm
Protected Creepage.	L_{sp}=	100 mm
Dry Arcing Distance	L_a =	210 mm
C). Temperature Rise : Contacts.		32 °C
Terminals.		32 °C
D). Dieletric Test Voltage:		
Terminal To Earth : 50 Hz.Dry W/Stand.		60 kV
50 Hz.Wet W/Stand.		50 kV
1.2 x 50 Impulse W/Stand.		150 kVp.
Terminal To Terminal : 50 Hz.Dry W/Stand.		70 kV
50 Hz.Wet W/Stand.		60 kV
1.2 x 50 Impulse W/Stand.		170 kVp.
E). Weight : Net (W/O. Mounting Brkt.)		10.5 kg
Gross		

This document is the property of NGK STANGER P/L and must not be copied or reproduced without its written permission nor disclosed to any third party.

3	C/A9385	6-95	WCT	10-14	FUJII
2	C/A9302	3-95	WCT	04-13	FUJII
1	Original	1-95	WCT	02-12	FUJII
ISSUE	CHANGE	DATE	DRN	AUTH	
8	PORCELAIN CHANGED	07-16	RAMANA	RAMANA	FUJII
7	PORCELAIN FLAT END WAS ROUNDEND				
6	Optional earthing stirrup added				
5	PORCELAIN ROUND END WAS FLAT END				
4	C/A9887				

SCALE	1 : 9
DRN.	
CH'D.	
APP'D.	
ISSUED	27-1-95

C - Type MVI

12/24kV. Single Pole Isolating Link.

150 kV BIL

Quality Endorsed Company
AS 3902/ISO 9002 Licence Number 368 Standards Australia

NGK STANGER
NGK STANGER Pty. Ltd. A.C.N. 004 225 012
MELBOURNE AUSTRALIA

SIZE	DRAWING No.	ISSUE
A4	70414NSW	8

a = 22.4mm b = 30.6mm