ALL DIMENSIONS IN MILLIMETERS - DO NOT SCALE - PLEASE ASK IF IN DOUBT

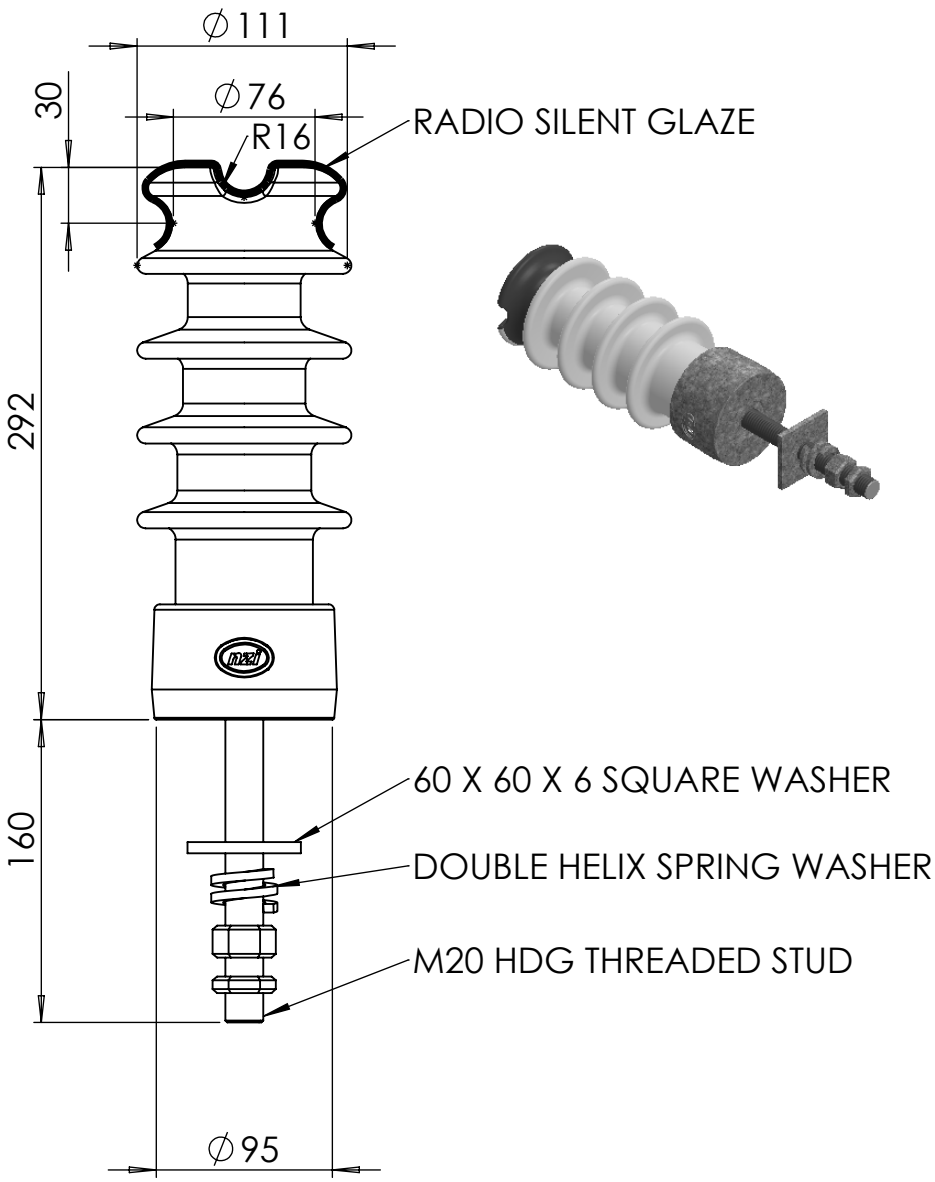




1 PALLET CONSISTS OF 144 INSULATORS, 770KG, 1.2 CUBIC METRES, UNIT WEIGHT 4.95KG

| Technical Specification | DESIGNED VALUES |
|---|---|
| SYSTEM HIGHEST VOLTAGE | 11 kV |
| WITHSTAND TEST VOLTAGES | |
| a. Power frequency - wet withstand (Vertical) | 50 kV |
| b. Power frequency - wet withstand (Horizontal) | 65 kV |
| c. Power frequency -dry withstand | 80 kV |
| d. Power frequency - dry flashover | 90 kV |
| e. Power frequency - wet flashover (Vertical) | 65 kV |
| f. Power frequency - wet flashover (Horizontal) | 75 kV |
| g. Lightening impulse - dry (Estimated) 1 | 105 kV |
| MINIMUM FAILING LOADS | |
| a. Cantilever | 10 kN |
| b. Torsion | 600 Nm |
| c. Tension | 20 kN |
| CREEPAGE DISTANCES | |
| a. Total | 300 mm |
| b. Protected | 50 mm |
| c. Flashover | 200 mm |
| Pollution Performance No ( ESAA Publication D (B) 19-1975 ) 12 | |

| | | |
|---|---|---|
| I | 11/4/17 | 3706 |

Drawn - B Stephens

Date - 27/10/2015

NEW ZEALAND INSULATORS nzi TEMUKA

NEW ZEALAND INSULATORS LTD
Tel: +64-3-615 0085
Fax: +64-3-615 8125
e-mail: sales@nzinsulators.co.nz

11 kV LINE POST INSULATOR
C/W M20x160 FIXED STUD (300W32)

D632-0551/I

Copyright RESERVED © No part of this drawing may be copied or reproduced by any means or transmitted in any form without the written permission of NEW ZEALAND INSULATORS LIMITED